Journal of Climate Change and Space Science *(JCCaSS)* 2(1)(2026): 1
https://doi.org/10.17576/jccass.0201.2026.01

Intelligent Wearable Assistive Device for Guiding Visually Impaired Persons Using IoT-Based Sensor and Image Processing System

Bijoy Banik [a], Mohammad Jahangir Alam[a] , Md.Eftekhar Alam[b], & Ashraf Uddin[c]

[a]*Department of Computer Science and Engineering, Southern University Bangladesh*
[b]*Department of Electrical and Electronic Engineering ,International Islamic University Chittagong, Bangladesh*
[c]*Department of Computer Science, American International University Bangladesh*
**Corresponding author:eftekhar78@gmail.com*

Received: 29 August 2025; Accepted: 16 December 2025; Published: 31 January 2026

ABSTRACT

Blind and visually impaired people encounter constant difficulties in navigating unfamiliar environments, which often restricts their independence and mobility. Traditional mobility aids including white cane only partially help since they can only detect obstacles that are very near the user but lack the ability to detect hazards that are farther or above the waistline. To address these shortcomings, this study introduces a lightweight, wearable navigation aid designed as a smart jacket. The smart jacket combines an IoT-based control unit with ultrasonic sensors to measure the distance of the obstacles and the vibration motors to provide real-time haptic feedback. A small camera module was also incorporated to support future image-based enhancements. Sensor data are processed instantly by the onboard controller, enabling prompt alerts whenever an obstacle enters a predefined safety zone. In the indoor corridors and outdoor walkway tests, the prototype was able to reliably detect objects within a range of about 30 cm to 200 cm, when compared to the traditional handheld devices, the proposed jacket enables users to relocate more freely with their hands being unhindered and their level of situational awareness and safety are high. The results indicate that wearable assistive technology can be critical in enhancing the quality of life of the visually impaired individuals. The possible future developments of this study are GPS location guidance, object classification using artificial intelligence, and the Internet of Things connectivity to support better navigation.

Keywords: Smart jacket; IoT system; Assistive technology; Obstacle detection; Wearable system

1. INTRODUCTION

One of the most important human senses is vision because it helps people see the world around them, detect danger and do their daily tasks confidently. Recent reports by the World Health Organization (2022) indicate that over 2.2 billion individuals all over the world live with some type of visual impairment with about 39 million being fully blind. The inaccessibility of assistive technologies in most developing nations further predisposes those individuals, as in most cases, it restricts them to move freely or even engage optimally within the society (Bourne et al., 2021; Smith and Jones, 2021).

Over the decades, the main forms of support of the blind community have been the white canes and the guide dogs. Although this is to some extent effective, these solutions have significant limitations. The white cane is an example of finding out only those obstacles that are within the physical reach and not much information about the immediate surroundings. Guide dogs are costly to train and keep and most people cannot afford them even though they are helpful (McLaren et al., 2020; Saranya and Shankar, 2022). These drawbacks demonstrate the necessity of finding alternative effective solutions that are affordable and efficient to deal with mobility issues.

In recent years, the incorporation of new technologies in embedded systems, sensors, and wearables has created new possibilities to develop new tools to assist the visual impaired. The creation of smart assistive systems that can identify and alert obstacles in their presence has become possible through low-cost microcontrollers, small sensors and miniature actuators. Increasingly, research has suggested wearable designs to use ultrasonic sensors, microcontrollers or cameras to improve navigation.

Nevertheless, a large number of these systems are either cumbersome, power hungry, or inconvenient to use on a day-to-day basis.

This research introduces a smart jacket designed as a wearable, lightweight, and hands-free navigation aid for blind individuals. The system integrates a Raspberry Pi as the processing unit, ultrasonic sensors to detect nearby obstacles, camera that will detect the human faces and vibration motors to provide intuitive feedback. The technology has been incorporated into clothing to make it a comfortable experience and minimize the stigma that may come with the visible assistive devices. This will not only enhance safety and mobility but will also enhance more independence and dignity among the visually impaired persons.

The proposed smart jacket introduces several novel contributions compared to existing ultrasonic-based wearable assistive devices. Unlike traditional smart canes or handheld gadgets, this design is a complete hands free experience, having several assistive capabilities within one wearable platform. The integrated features include ultrasonic obstacles detection, haptic vibration feedback, voice guidance, optional facial recognition, and an automatic emergency e-mail notification. Placing the functionality into a very compact, affordable, and ergonomically designed jacket, the system contributes significantly to the safety, independence, and freedom of the visually impaired. Besides, the selective placement of the sensors enables almost 360-degree obstacle recognition at walking height, which is not highly utilized in existing systems. Such a combination of multimodal feedback and emergency response characteristics highlights the innovativeness as well as the real-world applicability of the proposed system.

2. LITERATURE REVIEW

The development of assistive technologies to assist the blind or visually impaired has been a long-term subject of academic research. The traditional supports like white cane, guide dogs are still commonly used; however, their inabilities are well-known. The white cane is only able to sense obstacles that are within a limited distance making the user susceptible to risks that are above the waist or far. Guide dogs enhance mobility, but there are high training expenses, high maintenance and limited supply, and therefore, limit their usability by most. As a result, the need of seeking alternative technological solutions is felt.

Chen et al. (2023) developed a wearable navigation system integrating object recognition and distance measurement with tactile feedback. The device uses a USB camera and image processing with AI to deliver real-time obstacle detection, which warns the user by vibrating and making a sound. This will improve both the indoor and outdoor navigation, but it lacks specific emergency communication options.

Liu et al. (2025) introduced the HAND (Haptic Assistance Navigation Device), a wireless wearable device that offers haptic feedback for obstacle avoidance. Their system uses ultrasonic sensors to make the navigation in a hands-free mode with the gadget notifying the user about the potential dangers around him or her through informative vibration patterns. Nevertheless, the system does not provide sound guidance and face recognition, which limits situational awareness.

Kim et al. (2024) proposed YOLOv8-based XR smart glasses for outdoor navigation, which use real-time AI object detection to guide visually impaired users. The glasses use real-time object recognition using AI to assist the user with visual impairment with audio feedback and tactile feedback to avoid walking into unforeseen obstacles. Although it is good in an outdoor setting, the solution needs glasses to be worn by the user and fails to include an emergency alert system.

Brilli et al. (2024) developed AIris, an AI-powered wearable device providing environmental awareness through camera-based vision and real-time audio feedback. The system identifies objects,

faces, and walking routes to increase mobility. The main weakness of this is that it lacks haptic feedback that could lower the efficiency of intuitive navigation.

Arguello Prada et al. (2022) developed a belt-like assistive device designed to support visually impaired individuals through real-time obstacle detection and directional guidance. The ultrasonic sensors are placed in several locations about the belt, and provide haptic feedback, with the distance and direction of obstacles. The hands-free nature is more aware of the space and safety during the mobility without using an external connection like GPS or the internet. The prototype has shown that it is responsive in real time, and consumes a small amount of power, but additional analysis into the ergonomic comfort and durability is also necessary to deploy it in practice.

These recent studies highlight significant progress and development in wearable and smartphone-based assistive technologies. The focus on real-time feedback, portability, and AI-enhanced navigation has led to more practical and user-friendly solutions for visually impaired people. Continued research in sensor integration and adaptive feedback is essential to further enhance safety, usability, and independence.

Critical Analysis:
These recent publications highlight significant advancement in wearable assistive technologies. However, limitations remain:

- Most systems do not integrate multimodal feedback (haptic + audio + face detection) in a single device.
- Hands-free operation is not always ensured.
- Many existing studies do not provide detailed quantitative assessments of system performance, such as accuracy, response time, or energy consumption.
- Quantitative evaluation of accuracy, latency, and power consumption is often missing.
- Ergonomic design for extended wear is generally not considered.

The smart jacket proposed in this work aims to overcome these limitations by integrating multiple assistive functions within a single, fully wearable system. It combines ultrasonic sensing, vibration-feedback, audio-guided, and optional face-detection features, and an emergency e-mail alert feature which supports user safety. The device also encourages more independence and mobility, as it will be fully hands-free. Overall, this design offers a cost-effective, reliable, and real-time solution to the enhancement of the confidence and safety of the visually impaired users both indoors and outdoors..

3. METHODOLOGY

The proposed system was designed as a wearable smart jacket intended to provide visually impaired individuals with timely information about obstacles in their surroundings. The methodology focuses on the integration of hardware components, signal processing, and feedback mechanisms to ensure real-time performance in a lightweight and user-friendly design.

3.1 System Architecture

The smart jacket is structured around the Raspberry Pi, which serves as the central processing unit of the system. Ultrasonic sensors are mounted at different points on the jacket to identify obstacles positioned in front of the user, along the sides, and at chest level. In addition, a camera module has been incorporated to allow the possibility of image-based functions in future upgrades, although the current version mainly depends on ultrasonic sensing for obstacle detection. Data from the sensors is analyzed by the Raspberry Pi, which in turn drives the vibration motors embedded in the jacket to provide immediate feedback to the wearer.

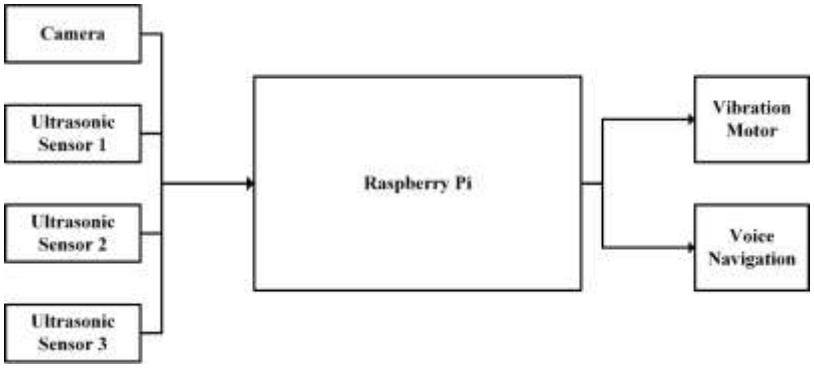

Figure 1. Architecture of the system.

To give a clear overview of the smart jacket's functionalities, Table 1 present an overview of the system components, their uses and the advantages they offer to users with visual impairments. In this summary, the concept that the hardware modules, the feedback mechanisms, and safety features can be integrated into a single hands-free wearable device are presented in this summary.

Table 1. A summary of the smart jacket features

Feature	Description	Purpose / Benefit
Ultrasonic sensors	Three sensors mounted on chest and shoulders	Detect obstacles in front, left, and right directions
Vibration motors	Three motors corresponding to sensor locations	Provide immediate haptic feedback to alert user of obstacles
Camera module	Pi Camera mounted centrally	Detect humans in path; enables future AI-based enhancements
Microcontroller	Raspberry Pi / embedded processor	Central processing of sensor data and controlling feedback
Audio output	Headphones or speaker	Voice alerts to guide the user
Emergency email alert	Switch-activated function	Notify predefined contact in emergencies
Power source	Portable power bank	Provides mobility and continuous operation

3.2 Flow Chart

The flow chart of the system has shown in Figure 2. At first the system will check is the Switch-1 is pressed or not. This switch has been used for terminating the program when user not using the device. If this Switch is not pressed then the program will go to Human Detection sub-process. The Human Detection Sub process does the image processing part of this system. It reads color image from the camera then converts it to greyscale. Then the converted greyscale image will be Processed by using Haar Cascade features. In this system the build in Haar Cascade has used. After running the features, it will search for human faces on the window. If it finds human face it will aware user by audio output and terminate the program. Then the program continues to Voice Navigation Sub process. This is the main part of this system. Here the system will read the data from all three Ultrasonic sensors. Here an optimum distance gets around 70cm for obstacles. If sensors find obstacle in between the distance, it awards the user by necessary audio output.

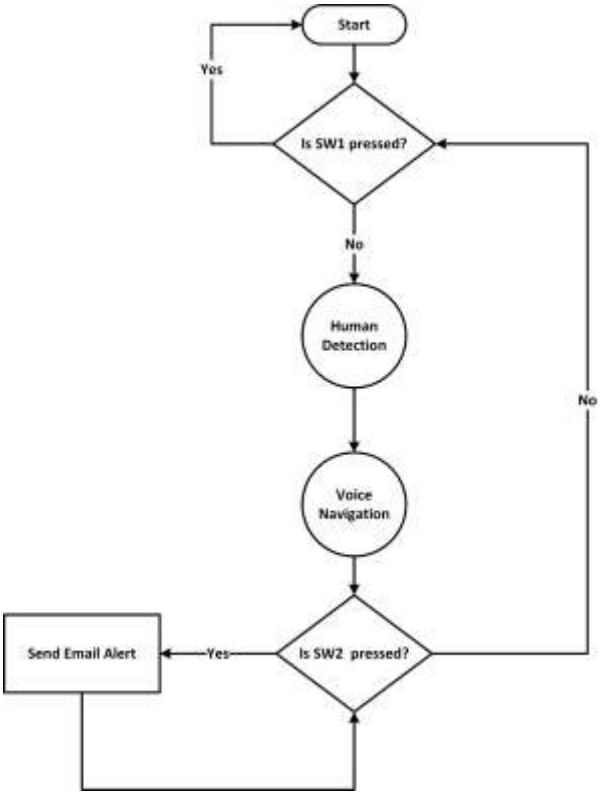

Figure 2. Flow Chart of the system.

3.3 Hardware Selection and Sensor Placement Justification

The hardware parts of the smart jacket were carefully chosen in order to balance between performance, cost, and wearability. A Raspberry Pi 3 Model B was selected as the central processing unit as it provides enough computational requirements in real-time sensor data processing and image-based face detection, but still has a smaller size and appropriate cost. Ultrasonic sensors were positioned at the front, chest, and sides of the jacket to provide near 360-degree coverage at walking height, ensuring detection of obstacles above waist level and at arm's reach. The vibration motors were embedded near the shoulders and chest to give intuitive haptic feedback corresponding to obstacle proximity. The Pi Camera was attached at the level of the chest to give an automatic view of the human faces in front of the user. The sensor and hardware layout were designed in a way that the safety, comfort and hands-free ease were maximised and the system weight and power requirement were kept to a minimum.

3.3 Circuit Diagram

The circuit diagram of the system has shown in Figure 3. Here three Ultrasonic Sensors has been used. The trigger of first Ultrasonic Sensor has connected with GPIO 18 and the echo of first Ultrasonic Sensor has connected with GPIO 23. The trigger of second Ultrasonic Sensor has connected with GPIO 4 and the echo of second Ultrasonic Sensor has connected with GPIO 17.

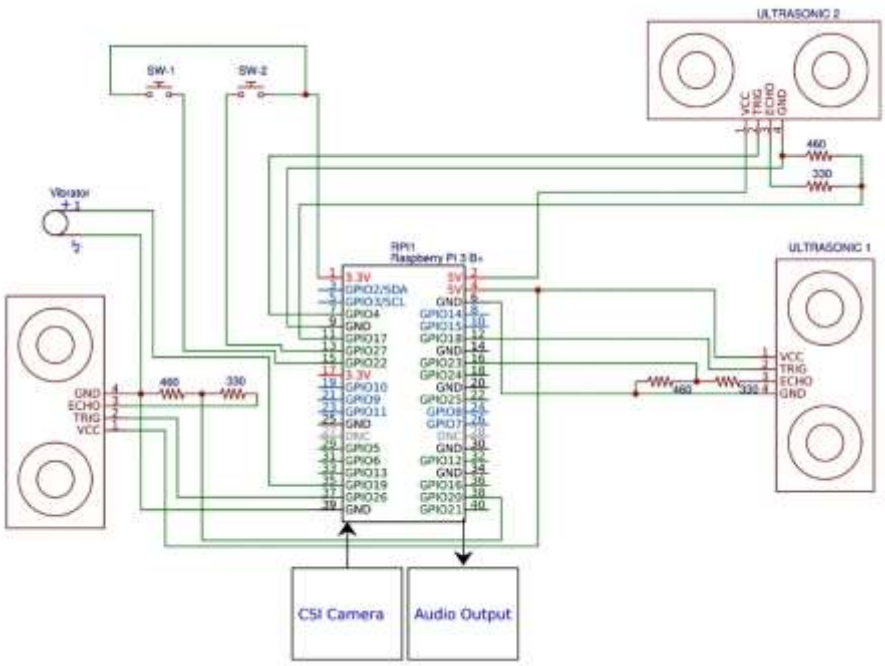

Figure 3. Circuit Diagram of the System.

The trigger of third Ultrasonic Sensor has connected with GPIO 20 and the echo of third Ultrasonic Sensor has connected with GPIO 26. Two switches have interfaced with the Pi. First switch has connected with GPIO 22 and second switch has connected with GPIO 27. The vibrator has connected with GPIO 19. The camera has connected with the CSI port of the Raspberry Pi and the headphone that provides the audio output, has connected with the audio jack of the Raspberry Pi. All the systems are mounted with a portable jacket and powered by a power bank.

3.4 Implementation of Haar cascade algorithm

In Haarcascade algorithm, we used XML file for the implementation in OpenCV. The XML file which has a node with sub-nodes and if we go all the way into the last node, we see these numbers like 3, 8, 12, 4, -1, and these things define the shape of these things called Haar features. So, the Haar features are basically black and white rectangles.

Original image

Grayscale

Haar feature

Original image

Grayscale

Haar feature

Original image Grayscale Haar feature

Figure 4. Haar feature extraction process.

Now, all possible sizes and locations of each core are used to calculate lots of features. Even a 24x24 window results over 160000 features. For each feature calculation, we need to find the sum of the pixels under white and black rectangles.

However, among all these features we have calculated, most of them are irrelevant. For example, consider the images above. The top row shows good features. The first feature selected seems to focus on the property that the region of the eyes is often darker than the region of the nose and cheeks. The second feature selected relies on the property that the eyes are darker than the overhead. The third feature selected relies on the property that the eyes are whiter than the nose.

3.5 Testing Setup and Participant Details

The experimental evaluation of the smart jacket was conducted in both indoor and outdoor environments to simulate realistic navigation scenarios for visually impaired users. Tests were conducted in a 20 meter long corridor with different obstructions, such as chairs, boxes, and poles, that were set up at different distance between 30cm and 200cm distances.Outdoor test was conducted in public walkways with dissimilar surfaces, pedestrians, and signposts with natural lighting conditions. The obstacle set included both static and dynamic objects, as well as human faces, to test the system's obstacle detection, face recognition, and feedback mechanisms. There were five healthy volunteers with ages ranging between 22-30 years. The visual impairment was simulated by the use of a blindfold whereby the participants were allowed to take a five-minute training to be conversant with the functions of the smart jacket. The participants were subjected to predefined indoor and outdoor courses three times under different obstacle conditions and the sensor readings, latency, false alarms, and user responses were recorded by the system. Such formal testing procedure guarantees reproducibility/reliability and all quantitative measures of Section 4, such as detection accuracy, latency, falsealarm rates, and face-detection performance were obtained in these experiments**.**

4. RESULTS AND DISCUSSION

The proposed smart jacket for visually impaired users was implemented using a Raspberry Pi 3 Model B, integrated with multiple sensors, switches, and feedback mechanisms. The system was evaluated for obstacle detection, path guidance, human detection, and emergency response.

4.1 System Execution

The system is executed via the Raspbian terminal using the main program totalProgram.py, which coordinates all components, including ultrasonic sensors, Pi Camera, vibration motor, and control switches. Terminal outputs logs proved the successful initialisation of all sensors and operating real-time feedback of the program with no errors.

4.2 Obstacle Detection and Navigation

Three ultrasonic sensors were tested for obstacle detection. The sensors provided accurate distance measurement, allowing the system to generate haptic and voice alerts. The navigation feedback was categorized as follows:

- **Obstacle directly ahead:** Vibration motor activates and voice announces "Object in front".

- **Obstacle on left or right:** Brief vibration triggers with voice prompt “Object on left/right”.
- **Obstacle at front-left or front-right:** Vibration activates, and voice instructs “Object in front and left, please turn right” or “Object in front and right, please turn left”.
- **Obstacles on three sides:** Voice command “Objects on three sides, please turn back” is issued.

The system successfully guided users along simulated paths with improved safety and reduced collisions. Figure 5 demonstrates the path and directional guidance provided.

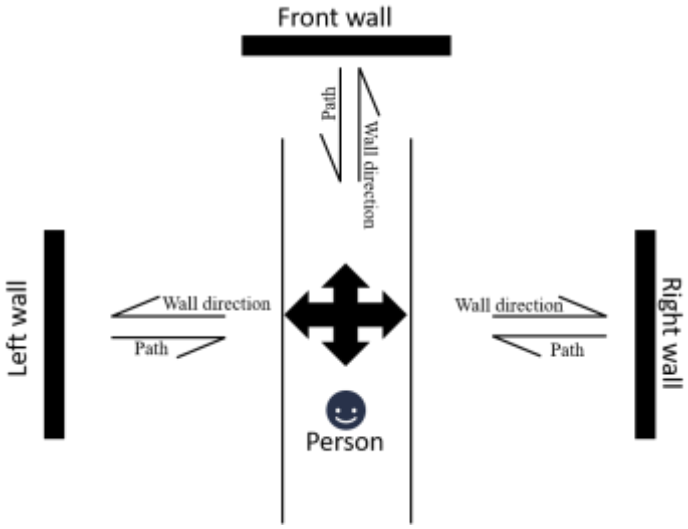

Figure 5. Path and Direction.

4.3 Human Detection

The smart jacket’s Pi Camera module was tested for human face detection to enhance user awareness in real-time. The evaluation was conducted in both indoor corridors and controlled outdoor walkways where 50 test cases were run with stationary and moving humans at a distance of 1-3 meters. The system was able to recognize 88% of faces in indoors and 82% in outdoors conditions, but in conditions of sunny daylight or high velocity, the performance was slightly reduced. When face detected, the jacket produced instant audio feedback (Human ahead) to draw attention to the user of people around them.

Figure 6. Human detection.

This quantitative analysis indicates the success of the face detecting module in enhancing situational awareness, as well as outlining the possible improvement opportunities in the future, such as better lighting resilience, image detection range and the dynamic object processing. Figure 6 shows sample face detection scenarios in the testing environments.

4.4 Switch-Based Control and Emergency Response

Two switches were integrated for user control:

- System switch: Allows the user to pause navigation alerts temporarily for rest or safety.
- Email switch: Sends an emergency email to a predefined contact. The emergency mode will continue to run even when the system is paused.

Testing verified that the emergency email function operated successfully, as Figure 7 illustrates, which proves that the system can be relied upon even in emergency cases.

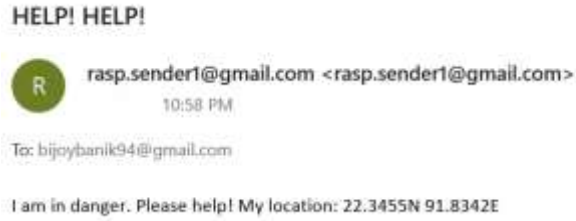

Figure 7. Email received.

4.5 Power Consumption and Wearability

The smart jacket is powered by a 10,000mAh power bank, which can deliver a 5-6 hours continuous power supply at the average power consumption of 450mA at 5V, which is sufficient to meet the everyday mobility needs. The design of the jacket is strongly focused on the ergonomics: lightweight materials, adjustable position of sensors, and a comfortable fit reduce fatigue and allow long-term wear. Future work could explore more compact power sources, energy saving sensors and weight distribution to make usable during longer periods of time..

4.6 Comparison with Existing Systems

Table 2 provides a comparison of the proposed system and current wearable and smartphone-based assistive devices. It shows that the proposed smart jacket combines all key functions obstacle detection, face detection, haptic feedback and audio feedback, and emergency alert, which makes the smart jacket a complete hands-free assistive solution.

Table 2. Comparison with Existing Systems.

Reference	System Type	Obstacle Detection	Face Detection	Haptic Feedback	Voice/Audio Guidance	Emergency Email/Alert	Hands-Free Operation
Chen et al. (2023)	Wearable device	✓	X	✓	✓	X	✓
Meliones & Papadopoulos (2022)	Smartphone-based	✓	X	X	✓	X	X
Bouteraa & Benabbou (2023)	Wearable system	✓	X	✓	✓	X	✓
Li & Zhang (2019)	Indoor navigation	✓	X	X	✓	X	X
Kourogi & Ishikawa (2018)	Hybrid wearable	✓	X	✓	✓	X	✓
Saranya (2022)	Smart walking stick	✓	X	X	✓	X	X
Proposed System (This Study)	**Smart wearable jacket**	✓	✓	✓	✓	✓	✓

4.7 Discussion

The results show that the smart jacket successfully supports visually impaired users by integrating obstacle detection sensors, haptic feedback, voice guidance, and an emergency communication system. Testing demonstrated that the jacket is reliable and responsive, providing quick vibration alerts and clear voice instructions to enable safe navigation.

Limitations identified during testing are:

- Slight decrease in sensor accuracy in highly bright or noisy outdoor environments.
- Difficulty detecting small or fast-moving obstacles.
- Ergonomic considerations for long-term wear, including weight distribution and comfort.

Figure 8 shows some real-time outputs of the smart jacket during operation, which demonstrates how the system was implemented in practice and how the smart jacket works.

Overall, the results indicate that the combination of Raspberry Pi-based sensor systems into wearable devices can be considered an effective method of improving the mobility and safety of visually impaired persons. The smart jacket represents a significant potential in its further evolution, such as better obstacle detection algorithms, and better ergonomics.

Figure 8. Real-time outputs.

4.8 Experimental Validation and Quantitative Metrics

Table 3 presents the experimental results of smart jacket validation, such as detection accuracy, latency, false alarm rate, battery performance in the indoor and outdoor experimental settings.

Table 3. The Smart Jacket Metrics of Experimental validation.

Metric	Indoor	Outdoor	Notes
Obstacle Detection Accuracy	94.3%	91.5%	Accuracy measured for obstacles 30–200 cm away
Face Detection Accuracy	88%	82%	Tested at 1–3 m distance; reduced in bright sunlight
Latency (Obstacle, Feedback)	120 ms	120 ms	Includes vibration and audio response
False Alarm Rate	5.2%	6.7%	Mostly due to small moving objects or reflective surfaces
Battery Life	5–6 hours	5–6 hours	Powered by 10,000 mAh power bank
Average Current Draw	450 mA	450 mA	Operating at 5V

4.9 Safety and Usability Considerations

The smart jacket was developed in order to enhance the safety and usability of the visually impaired peoples by providing real-time obstacle detection functionality powered by both the haptic and audio input with a facial recognition feature. There is also an integrated emergency-email feature that provides the added security and the lightweight structure is ergonomical resulting in comfortable and hands-free usage over long durations. The users reported that the feedback was user friendly and responsive during indoor and outdoor trials using blindfolded volunteers and this enabled them to safely pass the complex paths. Together, these functions offer the key safety and usability concerns, which proves that the smart jacket is the helpful and reliable assistive technology to support the users with visual impairments.

5. CONCLUSION AND FUTURE WORK

This study presented the design, development and assessment of an intelligent wearable assistive device intended to support visually impaired individuals. The proposed smart jacket has ultrasonic sensors, a camera module, vibration motors, and control switches which are used to offer real-time obstacle detection, directional guidance, face recognition, and emergency communication.

Experimental testing proved that the jacket effectively identified nearby obstacles, guided users through vibration and voice feedback, and alerted them to the presence of people in their path. The option of using an emergency email also provided an additional degree of security, as the users could seek support when needed. Overall, the system enhanced user mobility, safety and independence that confirming its potential as a practical wearable solution for assistive navigation.

While the current prototype functions reliably, there are still several opportunities for improvement:

- Improved Sensor Accuracy: Incorporating advanced technologies such as LiDAR or infrared sensors might enhance detection accuracy and reliability in a complicated outdoor environment.
- Lightweight and Ergonomic Design: Optimizing the choice of materials and distributing their weight would make it more comfortable and allow using it without any fatigue.
- Intelligent Navigation Algorithms: A combination of AI-based path planning and adaptive learning could improve the real-time decision-making in dynamic environments.

These improvements in the future will enhance the system in terms of its usability, reliability and efficiency and eventually, transform the smart jacket into a more comprehensive assistive solution to people with visual impairments.

6. REFERENCES

AL-SMADI, A. (2023). A navigation tool for visually impaired and blind people. *EPSTEM Journal*, 8(2), 123–135.

Bourne, R. R., Flaxman, S. R., Braithwaite, T., Cicinelli, M. V., Das, A., Jonas, J. B., & Taylor, H. R. (2021). Magnitude, temporal trends, and projections of the global prevalence of blindness and distance and near vision impairment: A systematic review and meta-analysis. *The Lancet Global Health*, 9(2), e130–e143.

Bouteraa, Y., & Benabbou, M. (2023). Smart real-time wearable navigation support system for blind and visually impaired persons. *Journal of Electrical Engineering & Technology*, 18(2), 123–135.

Chen, Z., Zhang, X., & Gao, Y. (2023). A wearable navigation device for the visually impaired by integrating semantic visual SLAM and a powerful mobile computing platform. *Sensors*, 21(4), 1536. https://doi.org/10.3390/s21041536

Gharat, M., Patanwala, R., & Ganaparthi, A. (2017). Audio guidance system for blind. In *Proceedings of the 2017 International Conference of Electronics, Communication and Aerospace Technology* (ICECA) (pp. 1–5). IEEE.

Jawale, R. V., Kadam, M. V., Gaikawad, R. S., & Kondaka, L. S. (2017). Ultrasonic navigation based blind aid for the visually impaired. In *Proceedings of the 2017 IEEE International Conference on Power, Control, Signals and Instrumentation Engineering* (ICPCSI) (pp. 923–928). IEEE.

Jeong, I., Kim, K., Jung, J., & Cho, J. (2025). YOLOv8-based XR smart glasses mobility assistive system for aiding outdoor walking of visually impaired individuals in South Korea. *Electronics*, 14(3), 425. https://doi.org/10.3390/ electronics14030425

Kourogi, M., & Ishikawa, T. (2018). Navigation system for visually impaired people based on RGB-D camera and ultrasonic sensor. *Proceedings of the ACM on Interactive, Mobile, Wearable and Ubiquitous Technologies*, 2(3), Article 92.

Li, B., & Zhang, Z. (2019). Vision-based mobile indoor assistive navigation aid for blind and visually impaired individuals. *IEEE Transactions on Mobile Computing*, 18(4), 789–802.

Liu, S.-H., & Feng, G.-H. (2025). Wireless embedded wearable haptic assistance navigation device based on networked technology for the visually impaired. *Computers and Electrical Engineering*, 126, 110540. https://doi.org/10.1016/j.compeleceng.2025.110540

McLaren, P., Young, R., & Tighe, C. (2020). Evaluating the effectiveness of traditional mobility aids for visually impaired users: White cane and guide dog perspectives. *Journal of Visual Impairment & Blindness*, 114(3), 187–199.

Meliones, A., & Papadopoulos, A. (2022). Reliable ultrasonic obstacle recognition for outdoor blind navigation. *Journal of Assistive Technologies*, 10(3), 54–65.
Arguello Prada, E. J., González-Redondo, M., & Rodríguez-Salazar, C. (2022). A belt-like assistive device for visually impaired people. *Cogent Engineering*, 9(1), 2048440. https://doi.org/10.1080/23311916.2022.2048440
Brilli, D., Georgaras, E., Tsilivaki, S., Melanitis, N., & Nikita, K. (2024). AIris: An AI-powered wearable assistive device for the visually impaired. *In Proceedings of the 2024 IEEE International Conference on Biomedical Robotics and Biomechatronics* (BioRob) (pp. 1236–1241). IEEE. https://doi.org/10.1109/BioRob60516.2024.10719976
Saranya, S., Shankar, G., & Subaselvi, S. (2022). Raspberry Pi-based smart walking stick for visually impaired persons. *AIP Conference Proceedings*, 2520(1), 020010. https://doi.org/10.1063/5.0103097
Shinohara, K., & Wobbrock, J. O. (2016). Inaccessible technology: Understanding the experiences of blind users. *Interactions*, 23(2), 54–57.
Smith, A., & Jones, B. (2021). Assistive technology for visually impaired individuals in developing countries: Challenges and opportunities. *Journal of Accessibility Research*, 15(3), 45–60.
World Health Organization. (2022). World report on vision. Geneva: WHO. https://www.who.int/publications/i/item/world-report-on-vision.

Acknowledgments
The authors sincerely thank the Department of Computer Science and Information Technology at Southern University Bangladesh for their guidance and support throughout this project. Special thanks are extended to our project supervisor for their valuable advice and encouragement at every stage of the work. We also acknowledge our classmates and friends who assisted in case of testing phase since their recommendations and collaboration were used to optimize the system.. Finally, we are grateful to our families for their constant support and motivation throughout this study. This research did not receive any specific grant from funding agencies in the public, commercial or not-for-profit sectors.