Jurnal Kejuruteraan SI 1(7) 2018: 21-26
https://doi.org/10.17576/jkukm-2018-si1(7)-03

Monitoring Production of Bacterial Cellulose by *Acetobacter xylinum 0416* with Fuzzy Logic via Simulation

(Pemantauan Penghasilan Selulosa Bakteria oleh *Acetobacter xylinum 0416* Menggunakan Simulasi Logik Kabur)

Nur Najihah Sulaiman[a,b], Norliza Abd. Rahman[a,b*], Faezah Esa[a,b]
[a]*Research Centre for Sustainable Process Technology (CESPRO),*
[b]*Chemical Engineering Programme,*
Faculty of Engineering & Built Environment, Universiti Kebangsaan Malaysia

ABSTRACT

Bacterial cellulose (BC) is a unique biopolymer with high mechanical strength, crystallinity, purity and biocompatibility which make it suitable in various fields. An economical and high quantity production in industrial scale has become a concern in BC production. This study emphasizes on the usage of matured coconut water, an agro waste as the fermentation medium of bacterial cellulose synthesis by Acetobacter xylinum 0416. A central composite design was employed to predict the optimum production of BC based on a combination of three parameters that are initial pH, temperature and inoculum size. To stimulate and improve the performance in fermentation, a fuzzy logic system was designed. The controlled variables are pH and temperature whereas flowrate of cooling water and acid or alkaline flowrate are the manipulated variables respectively. The temperature of 32°C, pH 4.5 and 15% of inoculum size were found as the optimum condition to achieve a maximum dry weight of BC in this fermentation. The optimal value of pH is the set point for pH (4.5) and temperature (32°C). For the size of inoculum, it is considered constant for the control method of fuzzy logic. The results show that control and monitoring of pH and temperature reached set point as well as ability to maintain the set point after the introduction of disturbance for pH from 4.5 to 4.3 and temperature from the 32°C to 30°C. This shows the effectiveness of the control system by using fuzzy logic.

Keywords: Biocellulose; Matured coconut water; Acetobacter xylinum 0416; Fuzzy logic simulation

ABSTRAK

Selulosa bakteria (BC) adalah biopolimer yang unik kerana memiliki kekuatan mekanik, kehabluran dan ketulenan yang tinggi serta bersifat keserasian bio yang membolehkannya digunakan di dalam pelbagai bidang. Sesuatu yang menjimatkan dan kuantiti yang tinggi di dalam skala industri menjadi keutamaan dan penghasilan BC. Kajian ini menekankan kepada penggunaan air kelapa tua iaitu sisa buangan pertanian sebagai media fermentasi kepada penghasilan selulosa bakteria oleh Acetobacter xylinum 0416. Reka bentuk komposit pusat telah digunakan untuk meramal penghasilan optima BC berdasarkan kombinasi tiga parameter iaitu pH awal, suhu dan saiz inokulum. Bagi merangsang dan meningkatkan prestasi proses fermentasi, sebuah sistem logik kabur telah direka. Pembolehubah kawalan ialah pH dan suhu manakala kadar alir air sejuk dan kadar alir asid atau alkali adalah pembolehubah manipulasi. Didapati suhu pada 30°C, pH 4.5, dan 15% saiz inokulum adalah keadaan optimum fermentasi bagi mendapatkan maksimum berat kering bagi BC. Nilai optimum ini menjadi titik set bagi pH (4.5) dan suhu (30°C). Bagi saiz inoculum ianya dianggap malar bagi kawalan secara kaedah logik kabur. Keputusan menunjukkan bahawa kawalan dan pemantauan bagi parameter pH dan suhu mencapai titik set serta keupayaan untuk mengekalkan titik set selepas kehadiran gangguan bagi pH iaitu dari 4.5 ke 4.3 dan suhu dari 32°C ke 30°C. Ini menunjukkan keberkesanan sistem kawalan dengan menggunakan kaedah logik kabur.

Kata kunci: Selulosa bakteria; Air kelapa tua; Acetobacter xylinum 0416; Simulasi logik kabur

INTRODUCTION

Acetobacter xylinum bacteria is a common bacteria used in the production of bacterial cellulose as it can use glucose, other types of sugar or glycerol to produce pure cellulose. A cell can convert about 108 molecules of glucose to cellulose within an hour (Brown 2009; Bielecki et al. 2006; Budhiono et al. 1999; Chawla et al. 2009; Nugroho & Aji 2015; Zainudin et al. 2016; Lina Fu et al. 2011). A fermentation medium containing high carbon source is required in maximizing the production of cellulose. However, nowadays consumption of sugar such as glucose, sucrose and fructose at high quantities is rather expensive and costly. Thus, the usage of mature coconut water (Appaiah et al. 2015; Campbell et al. 2000; Raghunathan 2013) as primary medium of fermentation process can be considered as it consist of various types of nutrient needed for bacterial growth and manage to reduce

the environmental issue regarding air pollution created from the release of sewage odor of mature coconut. In addition, it also contain high glucose content and is able to generate a maximum biocellulose production (Lestari et al 2013; Anh Dao et al. 2014).

Fuzzy logic control system is used to simulate the optimal condition for biocellulose production since most of the previous researchers lack of this method. Compared with other control systems, fuzzy logic control system has ability to process the input information as well as creating the required output (Ahmad Zuhairi et al. 2014; Dernoncourt 2013).

The objectives of this paper are to show a potential medium for fermentation from agro waste which is mature coconut water, production of BC from *Acetobacter xylinum 0416* and to control and monitoring the fermentation with proposed fuzzy logic technique via simulation.

METHODOLOGY

The methodology for this process starting with cultivation of bacteria strain used in this experiment which is *Acetobacter xylinum 0416* followed by production of BC in fermenter and simulation of fementation process using fuzzy logic control and monitoring.

MICROORGANISM

The bacteria strain used in this experiment is *Acetobacter xylinum 0416* received from the Malaysian Agricultural Research and Development Institute (MARDI) Serdang. The bacterial culture was preserved in sterile coconut water medium (Table 1) and stored at 4°C. Prior to the fermentation, a new inoculum was prepared by inoculating 1:10 stock culture into mature coconut water The inoculum was then agitated at 150 rpm, 30°C for 3 days.

TABLE 1. Medium composition

Composition	Quantity
Glucose	8 g
Mature Coconut water	100 ml
Ammonium sulphate	0.5 g
Acetic acid	Up to pH 4.5
Inoculum	10 ml

A batch fermentation process control system was designed (Figure 1) and some parameters were regulated to achieve optimum fermentation conditions using Design Expert 8 software:

i. Temperature : 27-32˚C
ii. Inoculum size : 5-15%
iii. pH : 4.5-8

The fermentation condition was prepared as recommended by Design Expert. The coconut water medium (Table 1) was adjusted to desire pH and sterilized before used. The inoculum was then added into coconut water medium and incubated in static state for seven days. Sampling was done periodically along fermentation process to record the changes of pH, temperature and reducing sugar concentration. Once the optimum conditions were obtain,a conventional controlled fermentation system was regulated by maintaining parameters at optimum condition periodically.

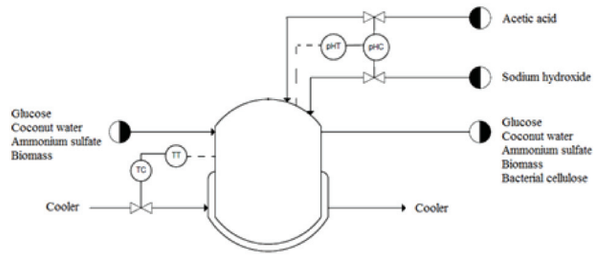

FIGURE 1. Fermentation

HARVESTING BACTERIAL CELLULOSE

The harvested BC pellicle was rinsed with distilled water two times followed by boiling in 0.5 M sodium hydroxide for 20 minutes to dissolve the cells that were trapped inside the pellicle. Then, the pellicle was washed with distilled water several times before being soaked in distilled water overnight. This step is intended to remove excess alkaline contained in the gel. The purified bacterial cellulose was dried in electric oven at 40°C until a constant dry weight achieved. The data of dry weight was taken as it showed the weight of pure cellulose only while the data for wet weight is not included since the water content in cellulose is not constant.

SIMULATION OF FUZZY LOGIC

A fuzzy logic controller system (Figure 2) was developed using fuzzy logic toolbox in simulink Matlab R2012a to stimulate the production of BC. The modelling for pH system is being developed by using equation 1.1 and 1.2. While for the temperature, equation 1.3 and 1.4 was being used to develop the block in Simulink.

$$V\frac{dx_a}{dt} = F_a C_a - (F_a + F_a)x_a \quad (1)$$

$$V\frac{dx_b}{dt} = F_b C_b - (F_a + F_b)x_a \quad (2)$$

$$\frac{dT}{dt} = \frac{1}{Ah}(f_1 T_1 - f_1 T) + \frac{UA_c}{\rho Ah C_p}(T_{st} - T) \quad (3)$$

$$\frac{dT_{st}}{dt} = \frac{\lambda}{C_M}W - \frac{UA_c}{C_M}T_{st} + \frac{UA_C}{C_M}T \quad (4)$$

After the Simulink block has been developed, fuzzy controller was connected while the input and output of the fuzzy controller were set up.

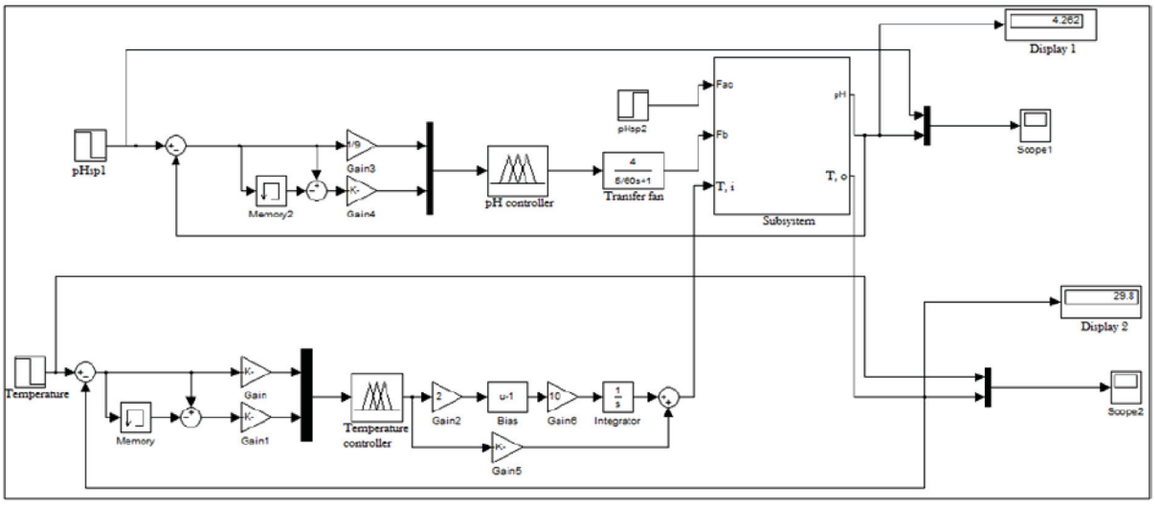

FIGURE 2. Simulink block

RESULTS AND DISCUSSION

OPTIMIZATION OF BACTERIAL CELLULOSE PRODUCTION

A.xylinum 0416 is known as cellulose producing bacteria that survive through consumption of carbon in various types of medium. In this study, the bacterial was tested their cellulose production in mature coconut water medium with additional nutrients for seven days fermentation. Effects of parameters, temperature and inoculum size on bacterial cellulose dry weight after seven days of fermentation were regulated through arrangement in central composite design as in Table 2. Analysis on these parameter shown that the production of BC fit significantly with second-order polynomial equation (equation 1.5) presenting F-value of 5.41 and the R^2 value of 0.9068. This indicates a good correlation between both predicted and experimental values.

TABLE 2. Dry weight of BC at different parameters

Run	Temperature (˚C)	Inoculum size (%)	pH	Cellulose dry weight (g/L)
1	27.00	5.00	4.50	2.200
2	29.50	1.59	6.25	4.173
3	32.00	15.00	8.00	7.597
4	33.70	10.00	6.25	9.819
5	27.00	15.00	4.50	3.447
6	32.00	5.00	4.50	7.503
7	29.50	10.00	9.19	4.875
8	29.50	10.00	6.25	5.111
9	32.00	15.00	4.50	12.823
10	29.50	10.00	3.31	3.482
11	29.50	18.41	6.25	4.687
12	27.00	5.00	8.00	2.625
13	32.00	5.00	8.00	5.547
14	27.00	15.00	8.00	2.931
15	25.30	10.00	6.25	1.905

$$y = 1.41519 - 0.27300 \times 1 - 0.11693 \times 2 + 0.68745 \times 3 + 5.81700E - 003 \times 1 \times 2 - 0.020260 \times 1 \times 3 - 6.01571E - 003 \times 2 \times 3 + 7.55355E - 003 \times 12 - 1.36766E - 004 \times 22 - 4.01992E - 003 \times 32 \quad (1.5)$$

Temperature was found as the only significant parameter ($p = 0.0016$) that has effect on cellulose production and no significant interaction among those three parameters (Figure 3). Thus, temperature of 32˚C, 15% inoculum size and pH 4.5 with desirability of 0.842 were suggested as the optimum conditions for fermentation of BC production. These conditions were then used for the subsequent experiment. This finding similar with previous researcher (Kasim & Rahman. 2016; Mohammad et al. 2014; Nugroho, D. A. & Aji, P. 2015; Rajwade et al. 2015).

COMPARISON OF EXPERIMENTAL AND FUZZY CONTROL SYSTEM

During synthesis of BC by *A. xylinum 0416*, a multi-step biochemical reactions process did occurred involving a large number of regulatory protein. The presence of sugars in

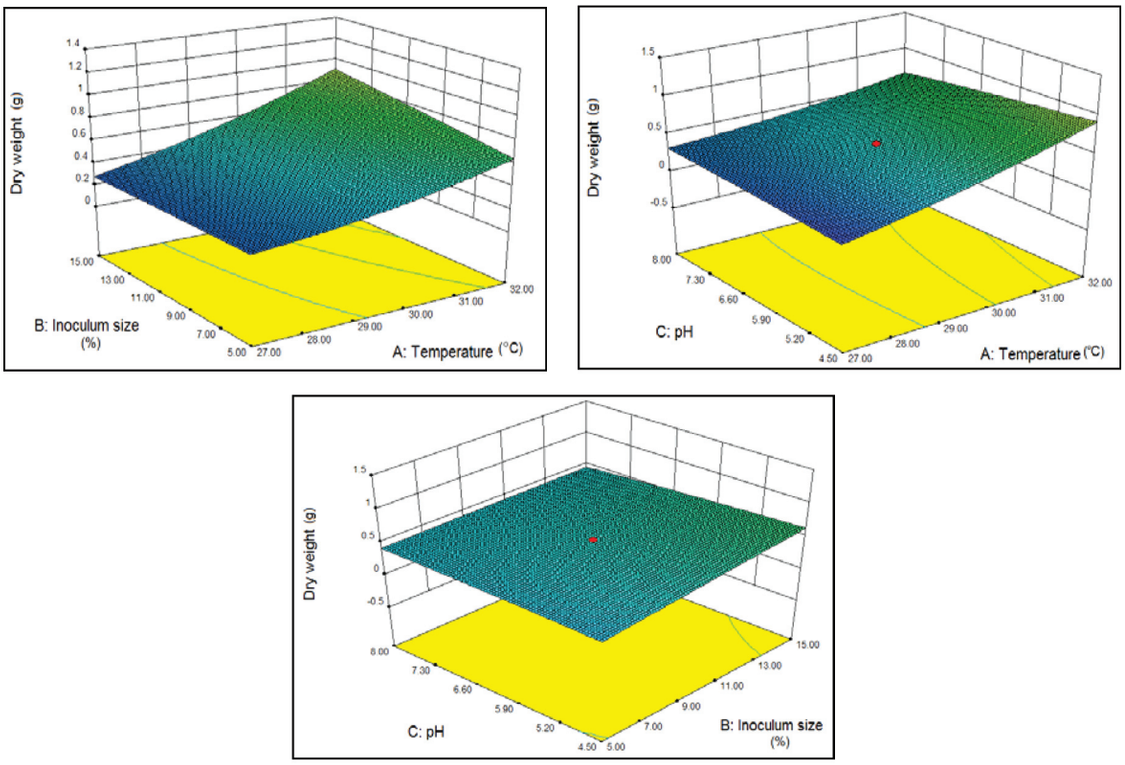

FIGURE 3. Effect of parameters interaction on BC production

medium are used as carbon sources for cellulose production. However, degradation of glucose during this process cause the release of gluconic acid as byproduct into medium and thus affect the pH of the culture and cellulose production. Simulation through fuzzy logic was applied as a mathematical approach to show uncertainty based on mathematics and provides analytical tool for the problems. The changes of pH were read periodically and adjusted to desired value manually to maintain the optimum condition. As depicted in Figure 4, huge pH fluctuation occurred when the system was manually controlled while compared to fuzzy control system, the pH did managed to be maintained on the optimum value. For the parameter of temperature, since experimental was done in incubator, it was managed to be kept constant for almost the time of fermentation (Figure 5). Thus, from this finding, fuzzy logic control system is more preferable and effective method than conventional control for fermentation of BC production. This results equivalent with other researchers (Chawla et al. 2009; Lestari et al. 2013; Jae et al. 2014; Keshk 2014).

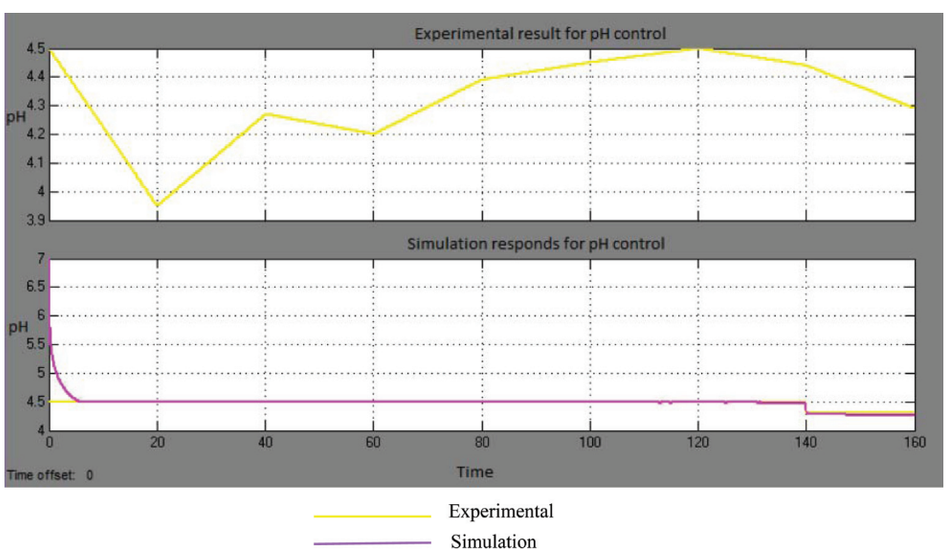

FIGURE 4. Comparison of experimental and simulation effects on pH

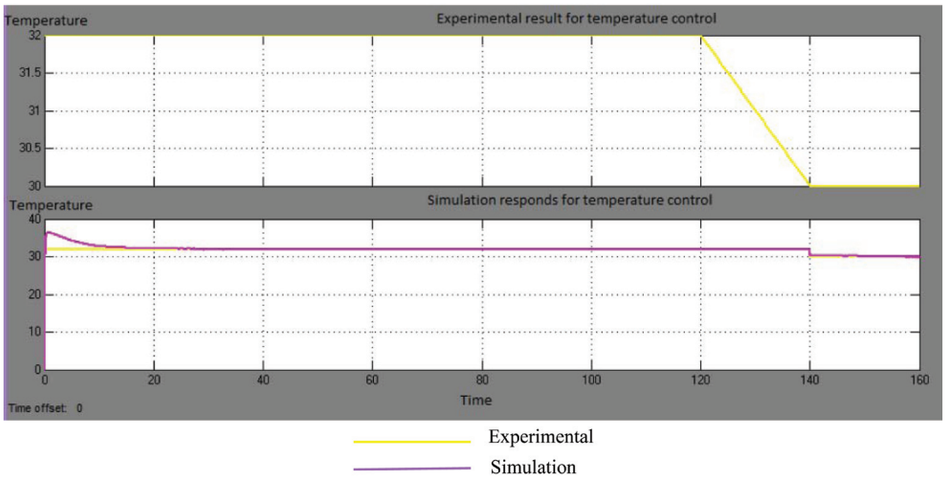

FIGURE 5. Comparison of experimental and simulation effects on temperature

CONCLUSION

Improvement and determination of fermentation condition of bacterial cellulose is important especially for the industrial production. From this study, the temperature at 32°C, initial pH of 4.5 and 15% inoculum were found as the optimum conditions to achieve the highest production of BC. In addition, simulation through fuzzy logic system is more preferable and accurate than conventional control system.

REFERENCES

Abdul Ghafar, A.A, Abd Rahman, N. & Esa, F. 2014. Pembangunan kawalan logik kabur dalam reaktor lapisan terpadat. *Jurnal Kejuruteraan* 26: 55-61.

Appaiah, P., Sunil, L., Kumar, P. K. P. & Krishna, A. G. G. 2015. Physico-chemical characteristics and stability aspects of coconut water and kernel at different stages of maturity. *Journal of Food Science and Technology* 52(8): 5196-5203.

Anh Dao T. Phan, Gabriele Netzel, Dongjie Wang, Bernadine M. Flanagan, Bruce R. D'Arcy & Michael J. Gidley. 2014. Binding of dietary polyphenols to cellulose: Structural and nutritional aspects. *Food Chemistry* 171(15): 388-396.

Bielecki,S. Czaja, W. Krystynowicz, A. & Brown, Jr R.M. 2006. Microbial cellulose, the natural power to heal wounds. *Biomaterials* 27: 145-151.

Brown, R.M. 2009. Microbial cellulose: a new resource for wood, paper, textiles, food and specialty products. http://www.botany.utexas.edu/facstaff/facpages/mbrown/position1.htm [1 November 2016].

Budhiono, A. Rosidi, B. Taher, H. & Iguchi, M. 1999. Kinetic aspects of bacterial cellulose formation in nata-de-coco culture system. *Carbohydrate Polymers* 40: 137-143.

Campbell-Falck, D., Thomas, T., Falck, T. M., Tutuo, N. & Clem, K. 2000. The intravenous use of coconut water. *American Journal of Emergency Medicine* 18: 108-111.

Chawla, P. Bajaj, I. Singhal, R. & Survase, S. 2009. Microbial cellulose: fermentative production and applications. Food *Technology and Biotechnology* 47(2): 107-124.

Lestari, P., Elfrida, N., Suryani, A. & Suryadi, Y,. 2013. Study on the production of bacterial cellulose from *Acetobacter xylinum* using agro-waste. *Jordan Journal of Biological Sciences* 7(1): 75-80.

Dernoncourt, F. 2013. Introduction to fuzzy logic. http://www.francky.me/doc/course/fuzzy_logic.pdf. [27 November 2016].

Jae, Y.C., Sang, M.S., Mi, A.M., Seung, G.K. & Kwang, S.G. 2014. Method for producing dried bio cellulose. https://www.google.com/patents/EP2808346A1?cl=en [2 November 2016].

Kasim, N. & Rahman. N.A 2016. Design and production control of biocellulose from *Acetobactor xylinum*. *Indian Journal of Science and Technology* 9(21). DOI: 10.17485/ijst/2016/v9i21/95241

Keshk, S.M.A.S. 2014. Bacterial cellulose production and its industrial applications. *Journal of Bioprocess and Biotechniques* 4(150): 2. DOI: 10.4172/2155-9821.1000150

Lina Fu, Yue Zhang, Jin Zhang & Guang Yang. 2011. Bacterial cellulose for skin repair materials. *Biomedical Engineering-Frontiers and Challenges*. Intech.

Mohammad, S.M., Rahman, N.A., Khalil M.S. & Abdullah, S.R.S. 2014. An overview of biocellulose production using *Acetobactor xylinum* culture. *Advance in Biological Research* 8(6):307-313.

Nugroho, D. A. & Aji, P. 2015. Characterization of Nata de Coco Produced by Fermentation of Immobilized *Acetobacter xylinum*. *Agriculture and Agricultural Science Procedia* 3: 278-282.

Raghunathan, D. 2013. Production of microbial cellulose from the new bacterial strain isolated from temple wash waters. *International Journal of Current Microbiology and Applied Sciences* 2(12): 275-290.

Rajwade, J. M., Paknikar, K. M. & Kumbhar, J. V. 2015. Applications of bacterial cellulose and its composites in biomedicine. *Applied Microbial and Biotechnology* 99(6): 2491-2511.

Zainudin, F.M., Hasan, H.A. & Abdullah, S.R.S. 2016. Kesan kepekatan mangan terhadap biojerapan mangan oleh pencilan *Bacillus Cereus* tempatan. *Jurnal Kejuruteraan* 28: 73-78.

*Norliza Abd. Rahman, Nur Najihah Sulaiman, Faezah Esa
Research Centre for Sustainable Process Technology (CESPRO),
Chemical Engineering Programme,
Faculty of Engineering & Built Environment,
Universiti Kebangsaan Malaysia, Bangi,
Selangor, Malaysia.

*Corresponding author; email: norlizajkkp@ukm.edu.my

Received date: 8th June 2018
Accepted date: 9th August 2018
Online First date: 1st October 2018
Published date: 30th November 2018